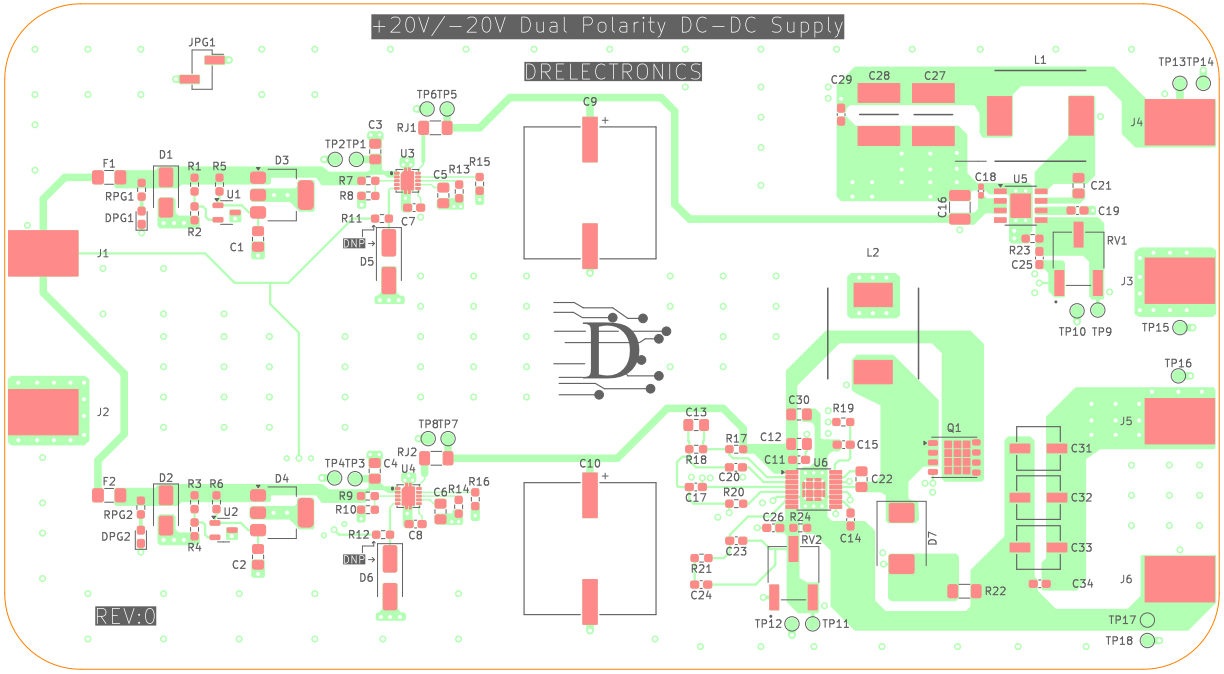


Board2Pdf: Colored TOP – Page 1/2

DRAWN BY: DRELECTRONICS
DESIGNED BY: DRELECTRONICS
**DEAN RICCIO**

Sheet: Colored TOP
File: 20V & −20V PS.kicad_pcb

***Title: 20V & −20V Power Supply***

| | | |
|---|---|---|
| Size: A4 | Date: 2025−11−29 | **Rev: 0** |
| KiCad E.D.A. 9.0.7 | | Id: /1 |

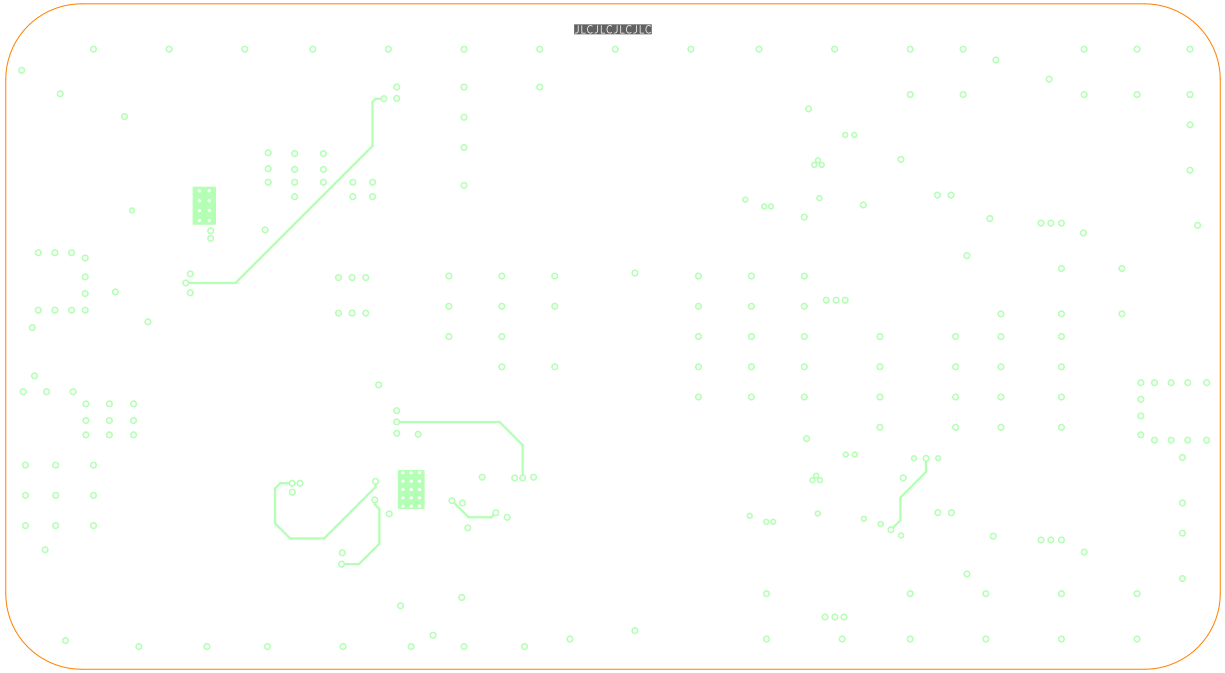


Board2Pdf: Colored BOT – Page 2/2

DRAWN BY: DRELECTRONICS
DESIGNED BY: DRELECTRONICS
**DEAN RICCIO**

Sheet: Colored BOT
File: 20V & −20V PS.kicad_pcb

***Title: 20V & −20V Power Supply***

| | | |
|---|---|---|
| Size: A4 | Date: 2025−11−29 | **Rev: 0** |
| KiCad E.D.A. 9.0.7 | | Id: /1 |